FOR NOT SPECIFIED TIGHTENING TORQUES SEE NPF 086

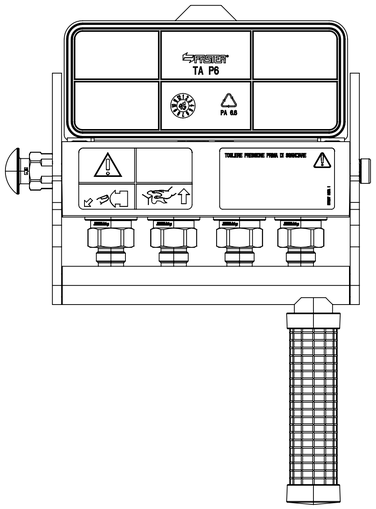

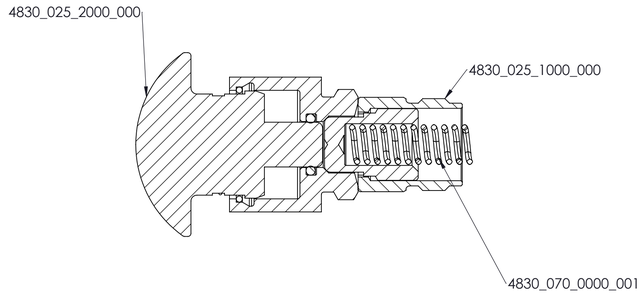

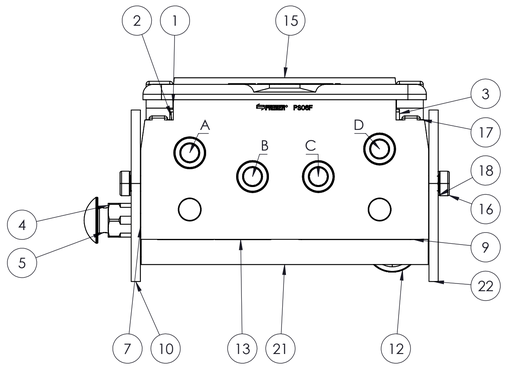

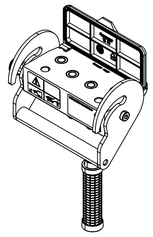

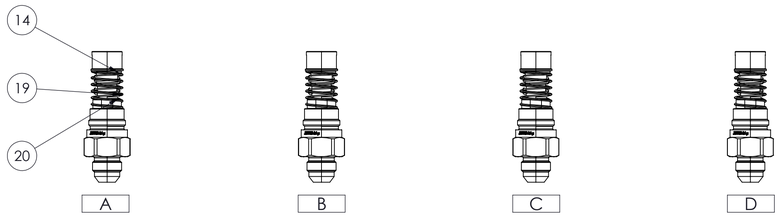

POS.	Q.TY	DESCRIPTION	DRAWING N°	HEX
22	1	NO_BOM	48300240005020	
21	1	NO_BOM	48300270000001	
20	4	GRUPPO INTERNO 06 PER PIASTRA	2FFNB38-13/FSF	27
19	4	MOLLA CURSORE ESTERNO FFH 06	41320720000300	
18	2	ANELLO DI COMPENSAZIONE	00483171000000	
17	1	TAPPO MULTIFASTER PS06	48300010001004	
16	2	VITE M8X20,5 DEFORMATA A FREDDO	48300133000020	
15	1	PIAS.FIS.PS06 SIC.SX/DX DA PRES.FUS	48320200003001	
14	4	CURSORE ESTERNO 2FFNB38 ACCIAIO	41320140000000	
13	1	STICKER MULTIFASTER SICURA SX	ET011	
12	1	MANOPOLA MULTIFASTER 25 MM. TONDA	48500240000012	
11	1	NO_BOM	48300240005011	
10	1	NO_BOM	48300240005010	
9	1	"ETICHETTA""TOGLI PRESSIONE""X PIASTRA"	ET007	
8	1	MOLLA SICURA PIASTRE P5	48300700000001	
7	1	NOTTOLINO SICURA P5 STAMPATO A FREDDO	48300220000011	
6	1	BOCCOLA X NOTTOLINO SICURA P5	48300251000000	
5	1	PULS SIC DELRIN ROSSO UV RES NEW	48300252000000	
4	1	SICURA NUOVA X PIASTRA P5, ECC.	SICURA P5	
3	1	MOLLA DESTRA X SUPPORTI/PB06 AISI	48300010005301	
2	1	MOLLA SINISTRA X SUPPORTI/PB06 AISI	48300010005300	
1	2	SPINA X TAPPO AUTOMATICO P6	48300010004000	

Faster
RIVOLTA D'ADDA-CR-ITALY

THIS DRAWING IS EXCLUSIVE PROPERTY OF FASTER S.p.A
ANY UNAUTHORIZED COPY AND/OR USE ARE STRICTLY PROHIBITED.

DRAWN: CONFIGURATOR
DATE: 27/10/2025
SIZE: A1
DIM. MILLIMETERS

GENERAL TOLERANCES (UNLESS OTHERWISE SPECIFIED)
LINEAR DIMENSIONS ±0.1
ANGULAR DIMENSIONS ±1°
RADIUS AND CHAMFER ±0.05
SHARP EDGES NOT DIMENSIONED: RADIUS OR CHAMFER MAX. 0.2

DIMENSION	SYMBOL
CRITICAL	▽
IMPORTANT	⊕
SECONDARY	NO SYMBOL

DESCRIPTION: MULTIFASTER FIXED PART
PART NUMBER : MF-PS06 F-005957-F
DRAWING N° DB_MF-PS06 F-005957-F
REVISION A 0